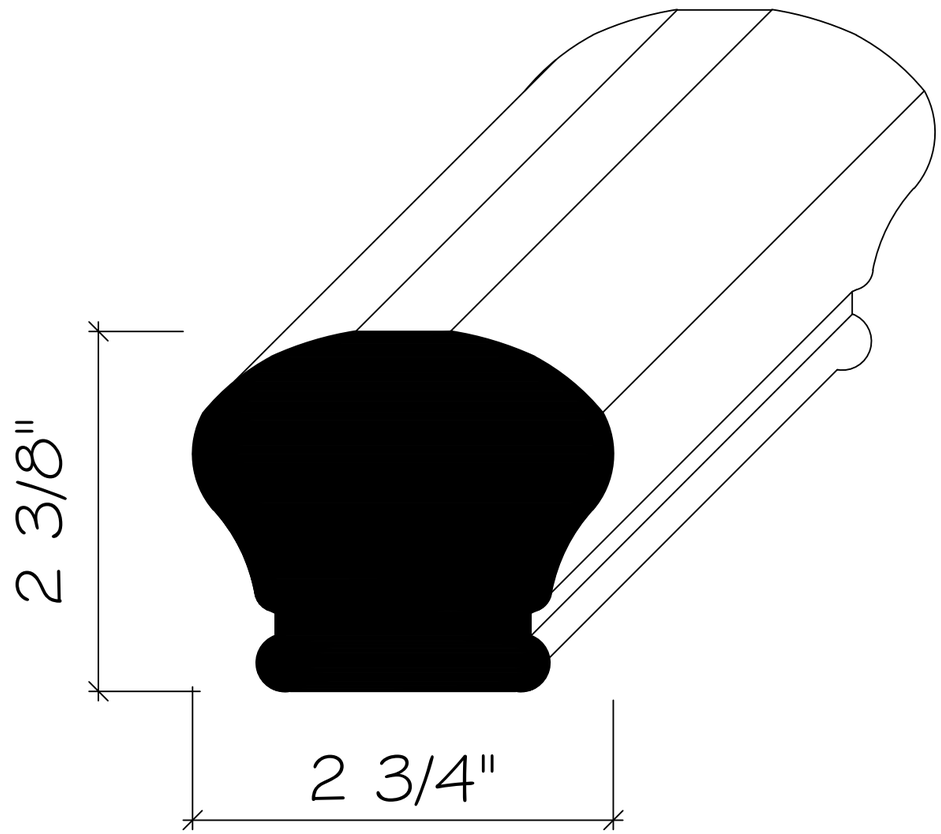

LBW #3-1 QQ